GARLAND

NOTICE OF MEETING
CITY OF GARLAND, TEXAS

Board of Adjustment
Public Meeting
Council Chambers
William E. Dollar Municipal Building
200 N. Fifth Street
Garland, Texas
July 15, 2026
6:30 PM

A meeting of the Board of Adjustment of the City of Garland, Texas will be held at the aforementioned location, date, and time to discuss and consider the following agenda items.

INVOCATION AND PLEDGE OF ALLEGIANCE: It is the custom and tradition of the members of the Board of Adjustment to have an invocation and recital of the Pledge of Allegiance prior to the beginning of the meeting. Members of the audience are invited to participate. However, members of the audience are not required to participate. The decision to participate is strictly a matter of personal choice and has no bearing on matters to be considered by the Board of Adjustment and will not affect the decisions to be made during the meeting.

NOTICE: The committee may recess from the open session and convene in a closed executive session if the discussion of any of the listed agenda items concerns attorney/client communication, including pending/contemplated litigation, settlement offer(s), and matters concerning privileged and unprivileged client information deemed confidential by Rule 1.05 of the Texas Disciplinary Rules of Professional Conduct. Sec. 551.071, Tex. Gov't Code.

AGENDA:

1. APPROVAL OF MINUTES

a. Consider approval of the Board of Adjustment Minutes for the May 20, 2026 meeting.

2. ITEMS FOR INDIVIDUAL CONSIDERATION

a. BOA 26-03 Joshua Lewis. The applicant is requesting a variance to have a reduced rear yard setback for an alley-facing garage door in order to construct a detached garage on the rear of their existing home. Section 2.34 (E) (1) (e) (i) of the Garland Development Code requires an alley-facing garage door to have a minimum setback of 20 feet from the applicable alley right-of-way line. This is a variance request to reduce the garage door setback to allow a detached garage on the rear side of the property at 721 Branch Drive. (District 5)

b. BOA 26-04 John Scott Horrell. The applicant is requesting a variance to Section 4.104 (A) of the Garland Development Code (GDC) which prohibits fences from being located within a property's front yard. This site is currently zoned Planned Development (PD) District 98-04 allowing for Single Family uses. This is a variance request to the GDC to allow the existing

fence to be located within the front yard. The property is located at 4405 Carlton Drive. (District 3)

3. ADJOURN

NOTE: A quorum of the City Council may be in attendance and may or may not participate in the discussions of the Board.

GARLAND

MINUTES

The Board of Adjustment of the City of Garland convened in regular session at 7:00 PM on May 20, 2026, in the Council Chambers at the William E. Dollar Municipal Building, 200 North Fifth Street, Garland, Texas, with the following members present:

Present:	John McDonald
	James VanDyke
	Wesley Johnson
	Margaret Bice
	Bruce Astin
	Joseph Willoughby
	Subhi Gharbieh
Absent:	Bruce Bishop
Staff Present:	Nabila Nur, Planning Director
	Stewart Starry, Planner II
	Mark Mann, Sr. Assistant City Attorney II
	Elisa Morales, Recording Secretary

1. APPROVAL OF MINUTES

a. Consider approval of the Board of Adjustment Minutes for the December 17, 2025 meeting.

Motion was made by Board Member Wesley Johnson to **approve** the Minutes as presented. Seconded by Board Member Margaret Bice. **Motion carried**: **7** Ayes, **0** Nays and 1 abstention by Board Member Subhi Gharbieh.

2. ITEMS FOR INDIVIDUAL CONSIDERATION

a. BOA 26-02 Henry Hinojoza. The applicant is requesting a variance to Section 4.104 (A) and 4.105 (C) of the Garland Development Code which prohibits fences from being located within a property's front yard and requires fence gates to be set back 20 feet from the property line. The existing fence was installed along the perimeter of the property within the front yard of the property located at 13401 Lyndon B Johnson Fwy (District 5). This site is currently zoned Urban Business (UB) District. This is a variance request to the GDC to allow the existing fence to be located within the front yard and the gates within 20 feet of the property line. (District 5)

Planner II, Stewart Starry, presented the request to the Board and remained available for questions.

The applicants, Jake Barthel, 2744 Highlands Court, Trophy Club, TX 76262 & Henry Hinojoza, 1815 Anglers Plaza, Grapevine, TX provided an overview of the request and remained available for questions.

Motion was made by Board Member Wesley Johnson to **approve** the application as presented. Seconded by Board Member James VanDyke. **Motion carried**: **7** Ayes, **0** Nays.

3. MISCELLANEOUS

a. Discussion and possible adoption of amendments to the Board of Adjustment By-laws

Consider amending the By-laws to update the meeting start time for the Board of Adjustment.
Planning Director, Nabila Nur, provided an overview of the reasons for the proposed change to the Board of Adjustment meeting start time from 7:00 p.m. to 6:30 p.m.

Motion was made by Board Member Wesley Johnson to **approve** the amendments to the By-laws as presented and update the start time from 7:00 p.m. to 6:30 p.m. beginning with the next scheduled meeting of June 17, 2026. Seconded by Board Member Subhi Gharbieh. **Motion carried**: **7** Ayes, **0** Nays.

4. ADJOURN

There being no further business to come before the Board of Adjustment, the meeting adjourned at 7:39 p.m.

Submitted By:

/s/ John McDonald, Chair
/s/ Elisa Morales, Secretary

Board of Adjustment Report

File No: BOA 26-03
District 5
Agenda Item:
Meeting: Board of Adjustment
Date: July 15, 2026

REQUEST

Applicant Joshua Lewis is requesting a variance to have a reduced rear yard setback for an alley-facing garage door in order to construct a detached garage on the rear of their existing home. Section 2.34 (E) (1) (e) (i) of the Garland Development Code requires an alley-facing garage door to have a minimum setback of 20 feet from the applicable alley right-of-way line. This is a variance request to reduce the garage door setback to allow a detached garage on the rear side of the property at 721 Branch Drive (District 5).

OWNER

Joshua and Laura Lewis

BACKGROUND

On April 30, 2026, the applicant submitted a permit application for a detached garage on the rear of the property and it was denied. The permit could not be approved because the proposed garage door did not meet the required 20-foot setback from the alley right-of-way line. Based on the site plan submitted, the proposed detached garage would provide approximately 4.5 feet between the garage door and the alley right-of-way line. As the proposed garage did not meet the required setback, the applicant submitted a variance request for the garage door setback to be reduced.

BOARD OF ADJUSTMENT GUIDELINES

Section 2.34 (E) (1) (e) (i) of the Garland Development Code requires that "regardless of other setbacks, a street-facing garage, or alley-facing garage door must have a minimum setback of twenty feet from the applicable street or alley right-of-way line." Section 2.22(E)(6) of the GDC sets forth the authority of the Board of Adjustment to grant variances where "the literal enforcement of the provisions of this GDC would result in an unnecessary hardship, and were the variance is necessary to permit the use of a specific parcel of land which differs from other parcels of land in the same district by being of such a restricted area, shape, or slope that it cannot be developed in a manner commensurate with the development permitted upon other parcels of land in the same district. A modification of the standards established by this GDC may not be granted to relieve a self-created or personal hardship, or for mere financial hardship. Further, a variance may not be granted to permit a person a privilege in developing a parcel of land not permitted by this GDC or not permitted on other parcels of land in the district. No variance may be granted if the granting of the variance will create an unnecessary hardship as herein defined on another parcel of property."

FINDINGS

Garage door setbacks adjacent to streets and alleys are primarily designed to provide sufficient area for vehicle maneuvering and to reduce potential conflicts between vehicles entering or exiting garages and traffic within the alley. Based on the site plan submitted, the proposed detached garage would provide approximately 4.5 feet between the garage door and the alley right-of-way line, which does not meet the minimum required 20-foot setback.

The applicant states that the size and shape of the rear yard, along with the location of the existing pool, restricts the ability to accommodate the required 20-foot setback while still allowing construction of the detached garage.

If this request is approved, it will still meet the City's Technical Standards Manual which requires residential garages to be 20 feet or greater in depth or less than 5 feet in depth from the right-of-way, private access drive aisle, or fire lane. The purpose of the less than 5 feet requirement is to ensure there is not enough space for vehicles to park in the driveway and hinder traffic in the alley.

Staff observed a hardship concerning the lot's available space in the rear yard to set the garage 20 feet from the alley. It is up to the Board of Adjustment to determine if a hardship is present.

CONSIDERATIONS

1. MOTION TO GRANT VARIANCE: Motion that the Board of Adjustment grant a variance request to Section 2.34 (E) (1) (e) (i) to reduce the garage door setback from the alley right-of-way line to approximately 4.5 feet because the facts and evidence presented at the public hearing indicated that a literal enforcement of the Ordinance will result in an unnecessary hardship for the applicant; and that the granting of the variance will not create an unnecessary hardship on any other parcel of property.

2. MOTION TO DENY VARIANCE: Motion that the Board of Adjustment deny the variance request because based on the facts and evidence presented at the public hearing there is no evidence that a hardship exists that warrant the requested variance; and that literal enforcement of the Ordinance will result in an unnecessary hardship for the applicant.

3. Any other action desired by the Board of Adjustment.

ADDITIONAL INFORMATION

i. Permit Application Submittal
ii. Site Photos
iii. Written Request
iv. Notification Map

PREPARED BY:
Kalyan Mutukundu
Planner I
Planning and Development
972-205-2833
KMutukundu@garlandtx.gov

REVIEWED BY:
Emma Chetuya Ph.D., AICP
Planning Administrator
Planning and Development
972-205-2453
echetuya@garlandtx.gov

Accessory buildings in Garland, Texas (storage sheds, detached garages, gazebos) cannot exceed 30% of the main building's floor area and must be placed at least 3 feet from side/rear property lines, or 6 feet from the main house if larger than 144 sq. ft. Dimensioned in RED.
Main House Area = 2418 sf / Detached garage cannot exceed 725.4 sf / PROPOSED SF = 638 SF

Structures over 400 sq. ft. require a foundation, and those over 500 sq. ft. have specific height and material requirements City of Garland, TX.
Setbacks (Behind the house): Minimum 3 feet from side and rear property lines City of Garland, TX.
Height: Buildings > 200 sq. ft. cannot exceed 15 ft. in height (10.5 ft. wall height).
> 500 sq. ft., maximum height increases to 25 ft., but cannot exceed the height of the main structure. PROPOSED HEIGHT = 15'-0"
These larger buildings must match the exterior finish of the main house City of Garland, TX.

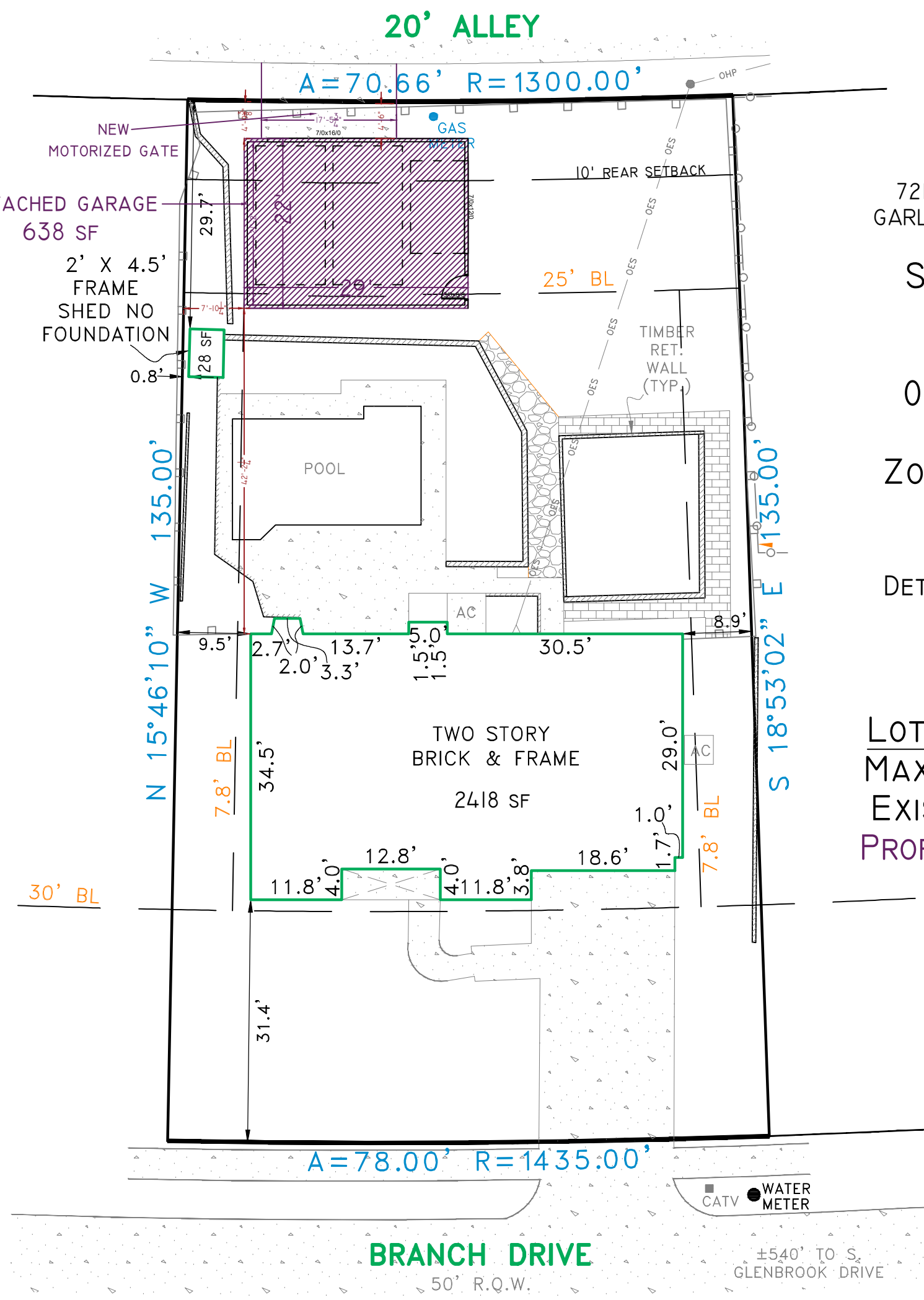

Lot 25
Block 21

721 Branch Drive
Garland, Texas 75041

SITE PLAN

10,023 sf
0.23 Acres

Zoning: SF-10

Detached Garage
off alley
638 SF

Lot Coverages:
Maximum = 45%
Existing = 18%
Proposed = 25%

Symbol Legend:

WOOD FENCE

CONCRETE

Project	Sheet
Branch Drive	1
Date 06/04/2026	
Scale 1" = 15'	

Project Name and Address
JOSH & LAURA LEWIS
721 BRANCH DRIVE
GARLAND, TX 75041

SURVEY PLAT

Lot 25, Block 21, Ninth Installment of Orchard Hills Estates, an addition to the city of Garland, Dallas County, Texas, according to the map or plat thereof recorded in Volume 45, Page 11, of the Plat Records of Dallas County, Texas.

Drafted By:
PMS DESIGNS, LLC.
Checked By: Heather Kelley (214) 417-4910

No.	Revision/Issue	Date
5		
4.		
3.		
2.		
1.	City comments at REAR SB	6/3/26

LOT 25
BLOCK 21

721 BRANCH DRIVE
GARLAND, TEXAS 75041

FLOORPLAN W/ ELECTRICAL AND ELEVATIONS

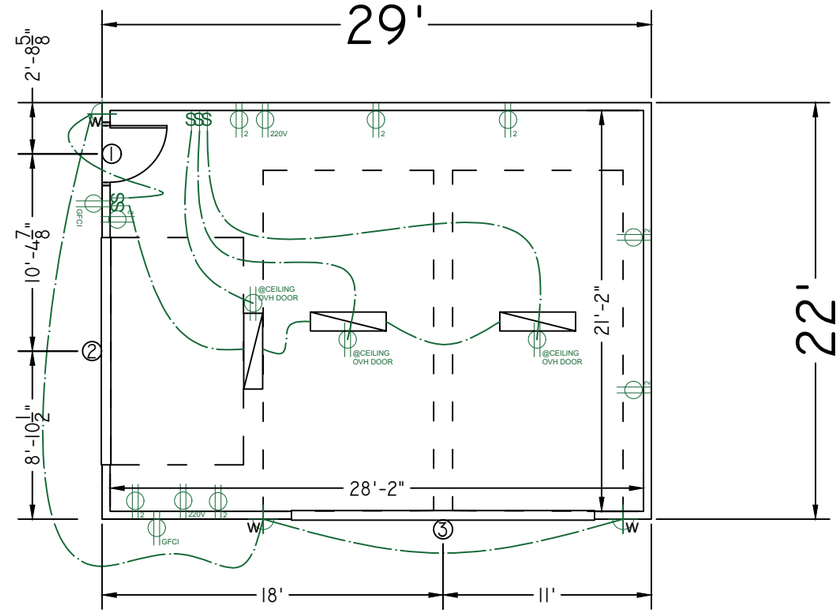

ELECTRICAL LINE DIAGRAM:

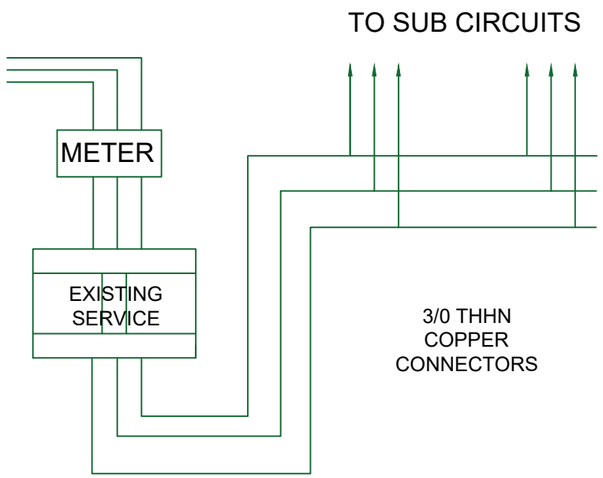

Symbol Legend:

- 110V Outlet
- Ground Fault Circuit Interrupter
- 110V Duplex Set (+) A.F.F.
- Light Switches
- LED Troffer Lights
- Wall Scones/Waterproof

DOOR SCHEDULE		TYPE	U-FACTOR
1	3/0x6/8	EXTERIOR	0.6
2	7/0x12/0	OVH DOOR	1.2
3	7/0x16/0	OVH DOOR	1.2

CODE COMPLIANCE:
2015 IRC, 2014 NEC, 2015 IECC

Project: Branch Drive
Date: 02/02/2026
Scale: 1/8" = 1'
Sheet: 2

Project Name and Address
JOSH & LAURA LEWIS
721 BRANCH DRIVE
GARLAND, TX 75041

721 BRANCH DRIVE
GARLAND, TEXAS 75041

FLOORPLAN W/ ELECTRICAL

Drafted By: PMS DESIGNS, LLC.
Checked By: Heather Kelley (214) 417-4910

No.	Revision/Issue	Date
5		
4.		
3.		
2.		
1.		

LOT 25
BLOCK 21

721 BRANCH DRIVE
GARLAND, TEXAS 75041

DETACHED GARAGE ELEVATIONS

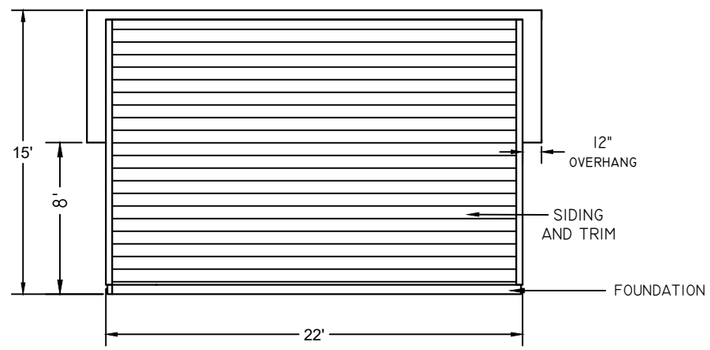

WEST SIDE OF GARAGE

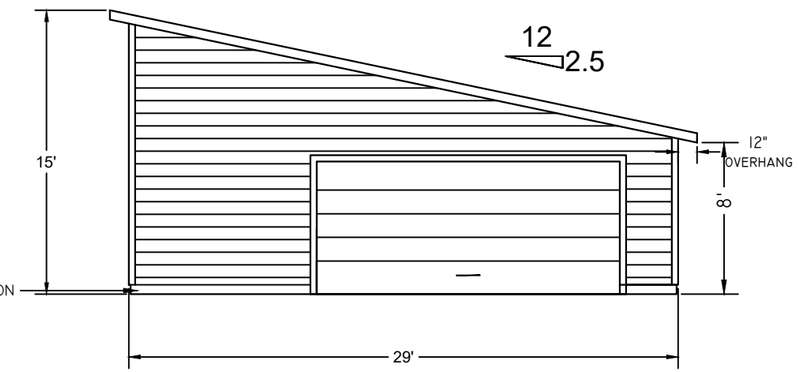

FRONT OF GARAGE (NORTH)
FACING ALLEY

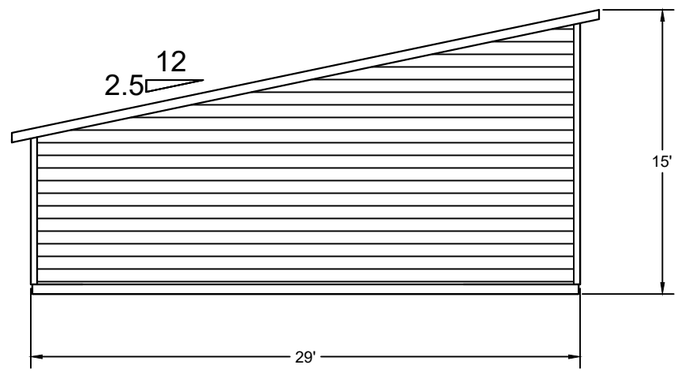

BACK OF GARAGE (SOUTH)
FACING HOUSE

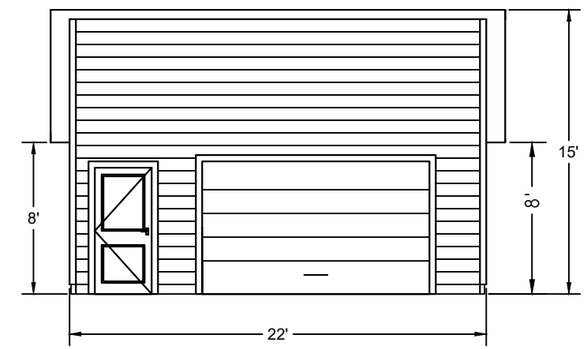

EAST SIDE OF GARAGE

Project: Branch Drive	Sheet: 3
Date: 02/02/2026	
Scale: 1/8" = 1'	

Project Name and Address
JOSH & LAURA LEWIS
721 BRANCH DRIVE
GARLAND, TX 75041

721 BRANCH DRIVE
GARLAND, TEXAS 75041

ELEVATION PLANS

Drafted By:
PMS DESIGNS, LLC.
Checked By: Heather Kelley (214) 417-4910

No.	Revision/Issue	Date
5		
4.		
3.		
2.		
1.		

BOA 26-03

View from alley

View from the back yard

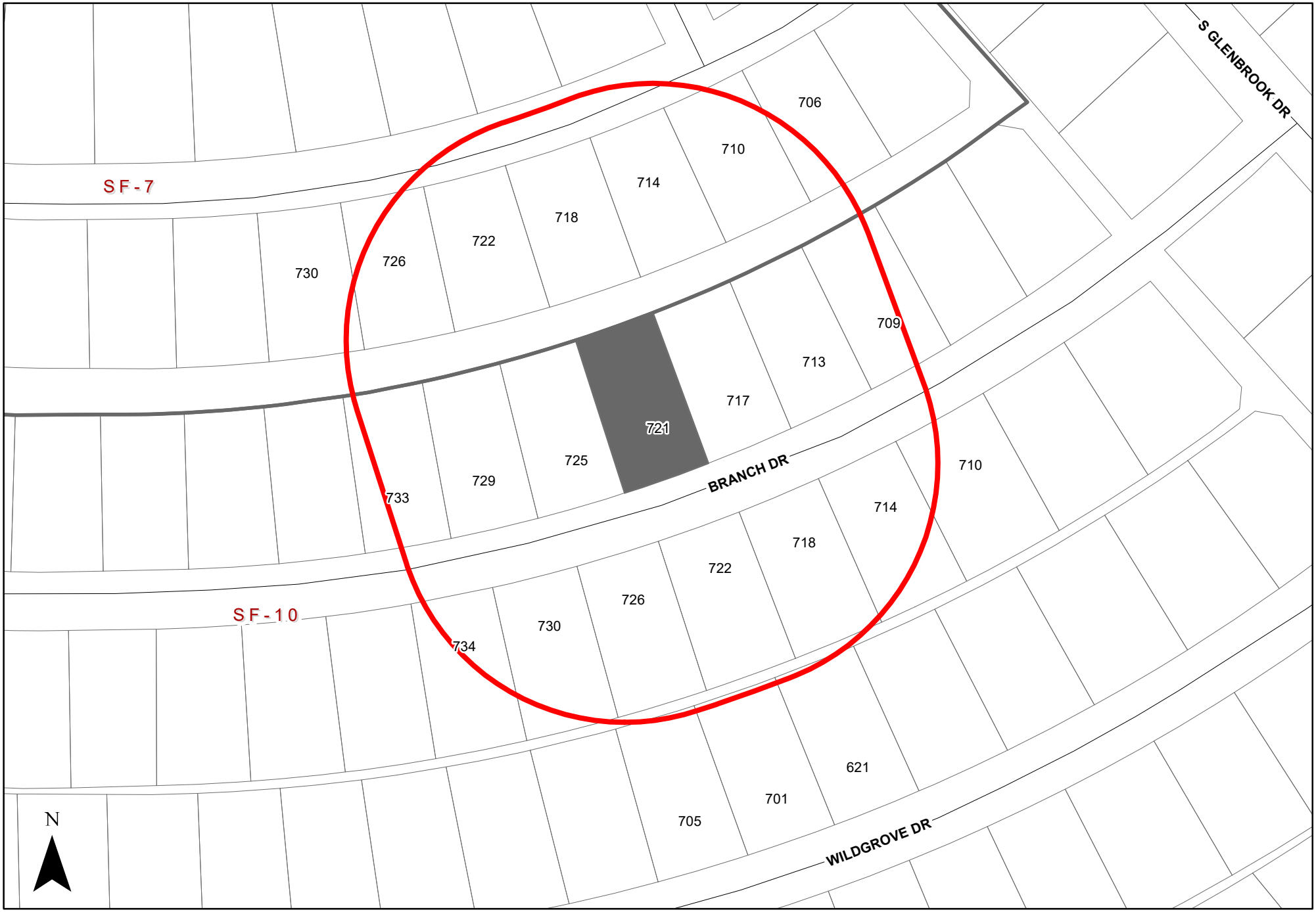

0 110 Feet 1 inch = 110 feet

BOA 26-03

INDICATES AREA OF REQUEST

INDICATES NOTIFICATION AREA

721 Branch Dr

Board of Adjustment Report

File No: BOA 26-04/District 3
Agenda Item: 1
Meeting: Board of Adjustment
Date: July 15, 2026

REQUEST

Owner and applicant John Scott Horrell. The applicant is requesting a variance to Section 4.104 (A) of the Garland Development Code (GDC) which prohibits fences from being located within a property's front yard. This site is currently zoned Planned Development (PD) District 98-04 allowing for Single Family uses. This is a variance request to the GDC to allow the existing fence to be located within the front yard.

OWNER

John Scott Horrell

BACKGROUND

The fence was originally in place when the applicant purchased the property in 2012, predating the key corner lot regulation, and was replaced in the same location and dimensions in 2026 without a permit. Based on the applicant's narrative, the replacement fence was constructed around early 2026, after the applicant engaged the contractor as winter approached. Replacing an existing fence does, however, require an approved fence permit and is reviewed under the current GDC standards, including Section 2.72(F), which defines a key corner lot, and Section 4.104(A), which does not allow a fence within either of the two front yards of a key corner lot. The prior nonconforming placement of the fence does not carry forward to the replacement fence, and the replacement is required to meet the standards in effect at the time of permitting rather than the standards in place in 2012. The front yard requirement under Planned Development (PD) District 98-04 is twenty (20) feet.

Prior to construction, the applicant submitted a fence permit application that was returned for insufficient information, and the applicant's contractor subsequently submitted and then withdrew a second application, such that neither application was formally denied at that stage. City staff advised that a variance would be the appropriate avenue to address the key corner lot standard. By the applicant's account, City staff advised him prior to construction that a variance would be the appropriate avenue to address the key corner lot standard, and he elected to proceed with construction of the fence as originally scheduled notwithstanding that advisement. The applicant subsequently reapplied for a fence permit, which the Building Inspections Department denied on June 4, 2026, because the fence is located within the front yard along Kettering Drive. The applicant has since chosen to pursue a variance request to the Board of Adjustment (BOA) to allow the existing fence to remain within the front yard.

BOARD OF ADJUSTMENT GUIDELINES

Section 4.104 (A) of the Garland Development Code requires that "No fence may be built within a required front yard, or in front of a building in a residential, nonresidential or mixed-use zoning district,". Section 4.100(D) of the GDC further provides that while a fence that did not comply with Article 8 as of the effective date of the GDC is allowed to remain, any improvements, reconstruction, or construction to the fence is subject to the provisions of Article 8. Accordingly, the reconstruction of the fence in 2026 subjects it to the current standards of Article 8, including the front yard restriction set forth in Section 4.104(A). Section 2.22(E)(6) of the GDC sets forth the authority of the Board of Adjustment to grant variances where "the literal enforcement of the provisions of this GDC would result in an unnecessary hardship, and where the variance is necessary to permit the use of a specific parcel of land which differs from other parcels of land in the same district by being of such a restricted area,

shape, or slope that it cannot be developed in a manner commensurate with the development permitted upon other parcels of land in the same district. A modification of the standards established by this GDC may not be granted to relieve a self-created or personal hardship, or for mere financial hardship. Further, a variance may not be granted to permit a person a privilege in developing a parcel of land not permitted by this GDC, or not permitted on other parcels of land in the district. No variance may be granted if the granting of the variance will create an unnecessary hardship as herein defined on another parcel of property."

FINDINGS

Section 4.104(A) of the Garland Development Code regulates the placement of fences and provides that no fence may be built within a required front yard, or in front of a building, in a residential, nonresidential, or mixed-use zoning district. The subject property is defined as a key corner lot under Section 2.72(F); it is located at the intersection of Carlton Drive and Kettering Drive and has a front yard setback on both street frontages. The existing fence is located within the front yard along Kettering Drive. The fence was installed without an approved building permit from the City of Garland Building Inspections Department.

The purpose of the key corner lot designation is to maintain a continuous front yard line along both streets that bound the corner lot, so that a structure on the corner lot is not advanced toward the street at a shallower setback alongside the front yards of the adjoining lots that face it. By holding the corner lot to a front yard setback on both frontages, the regulation preserves the open character, visibility, and streetscape alignment of the front yards that the neighboring properties present to each street.

The GDC allows fences to be located within the front yard of a residential property under certain criteria, which this fence does not meet. Those criteria limit the fence to a maximum height of three and one-half (3.5) feet, restrict the materials to wood or ornamental metal, and require at least a four-inch wide vertical space for each linear foot and at least a one-foot wide horizontal space between horizontal portions of the fence; or, alternatively, a fence less than two and one-half (2.5) feet in height made of brick or masonry, excluding cinder block. The installed fence is approximately eight (8) feet in height and is constructed of solid wood with a dark cedar stain. While wood is a permitted material, the fence does not satisfy the first criterion because it exceeds the three and one-half (3.5) foot maximum height and, being solid, does not provide the required four-inch wide vertical space for each linear foot or the one-foot wide horizontal space between horizontal portions of the fence. The fence likewise does not satisfy the alternative criterion, as it is neither less than two and one-half (2.5) feet in height nor constructed of brick or masonry.

The property does begin to slope downward as it approaches Kettering Drive until it reaches the retaining wall; however, the required setback would locate the fence closer to the building and farther from the slope; inward to the flatter portion of the property. The slope of the property therefore does not limit the applicant's ability to meet the GDC requirements.

Staff was unable to observe a hardship concerning the area, shape, or slope of the property. It is up to the Board of Adjustment to determine if a hardship exists.

CONSIDERATIONS

1. MOTION TO GRANT VARIANCE: Motion that the Board of Adjustment grant a variance to Section 4.104 (A) to allow a fence within the front yard of the property line because the facts and evidence presented at the public hearing indicated that a literal enforcement of the Ordinance will result in an unnecessary hardship for the applicant; and that the granting of the variance will not create an unnecessary hardship on any other parcel of property.

2. MOTION TO DENY VARIANCE: Motion that the Board of Adjustment deny the variance because based on the facts and evidence presented at the public hearing there is no evidence that a hardship exists that warrant the requested variance: and that literal enforcement of the Ordinance will result in an unnecessary hardship for the applicant.

ADDITIONAL INFORMATION

i. Site Exhibit
ii. Site Photos
iii. Written Request
iv. Notification Map

PREPARED BY:
Stewart Starry
Planner II
Planning and Development
972-205-2833
sstarry@garlandtx.gov

REVIEWED BY:
Emma Chetuya Ph.D., AICP
Planning Administrator
Planning and Development
972-205-2453
echetuya@garlandtx.gov

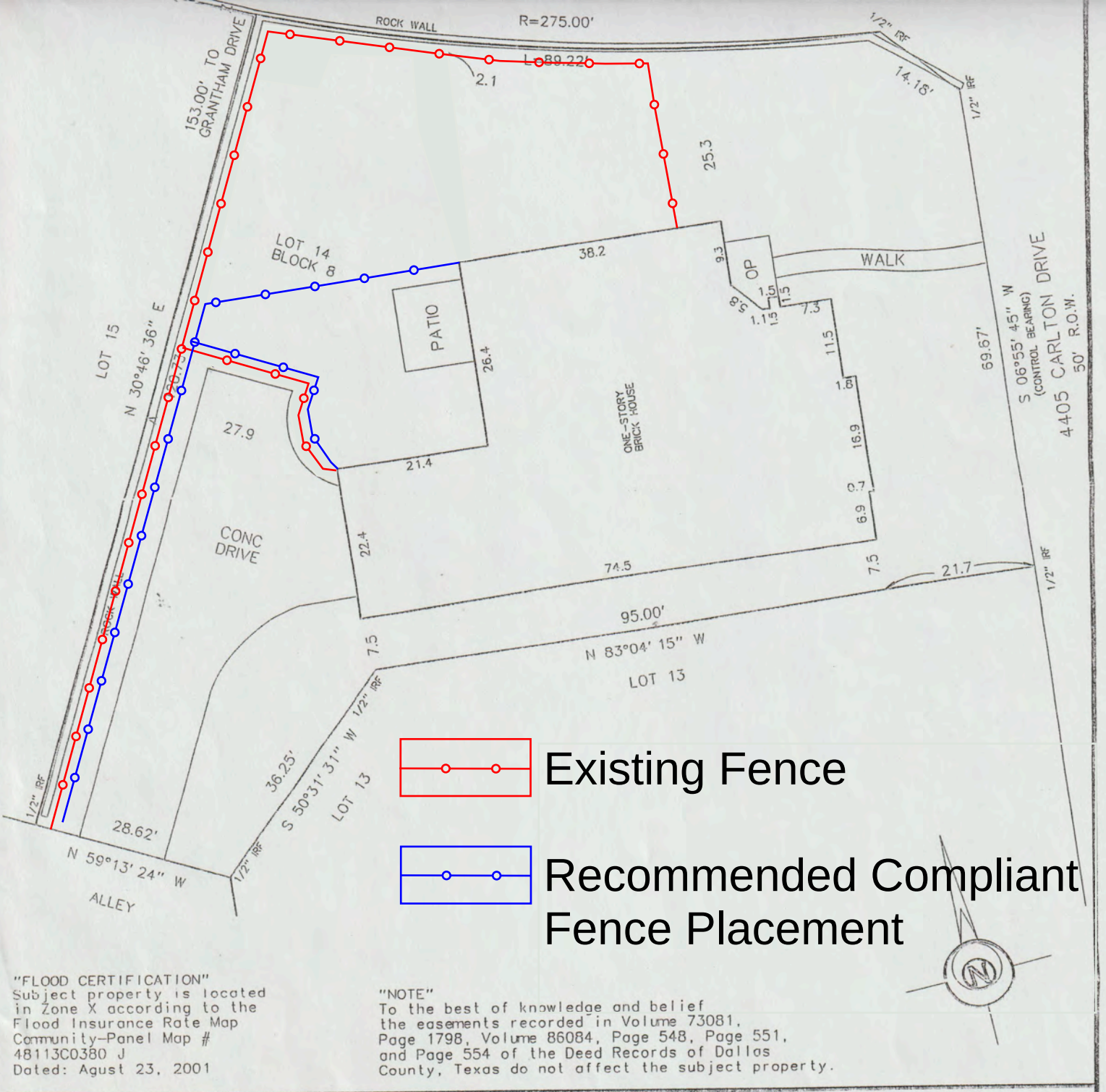

"FLOOD CERTIFICATION"
Subject property is located in Zone X according to the Flood Insurance Rate Map Community-Panel Map # 48113C0380 J
Dated: Agust 23, 2001

"NOTE"
To the best of knowledge and belief the easements recorded in Volume 73081, Page 1798, Volume 86084, Page 548, Page 551, and Page 554 of the Deed Records of Dallas County, Texas do not affect the subject property.

STATE OF TEXAS REGISTERED T.W. BARROW 1994 PROFESSIONAL LAND SURVEYOR

"The Plat hereon is a true, correct and accurates representation of the property as determined by survey, the lines and dimensions of said property being as indicated by Plat, the size, location and type of buildings and improvements are as shown, all improvements being within the boundaries of the property, except as shown, se back from the property lines the distances indicated and that the distance from the nearest intersecting street or road is as shown on said Plat. There are no encroachments, conflicts, protrusions or apparent easements, except as shown."

DATE: 9-9-2002

O ..... IRON ROD
X--X-- ..... FENCE LINE
--T--E-- ..... UTILITY LINE

T.W. BARROW
REGISTERED PROFESSIONAL LAND SURVEYOR

7104 GRAPEVINE HIGHWAY
FORT WORTH, TEXAS 76118
(817) 268-0200

SCALE: 1" = 20'

SHW-08-14

BOA 26-04

View from Carlton Dr facing the property

View from Kettering Dr facing the property

Kettering Dr street-scape facing West

Kettering Dr street-scape facing East

PETITION TO BOARD OF ADJUSTMENT
CITY OF GARLAND, June 11, 2026

FENCE PERMIT, REQUESTING VARIANCE OF KEY LOT
4405 Carlton Dr., Garland Tx 75043
Dr. John Scott Horrell

Justification:
Because there was no new expansion or variation of the original fence dimensions when we purchased the property in 2012, I didn't think there would be a problem in rebuilding the fence to the same dimensions (height, length, dark cedar stain). As senior professor at a graduate school, I was brought out of semi-retirement to lead a struggling department. When decisions were made with Cisco Fencing as winter approached, I had 120 graduate and doctoral students plus my new role leading another academic department in addition to conferences to attend. I did submit a Fence Permit to the City of Garland but it was rejected for lack of information. Then my contractor Cisco Fencing did the same but pulled the application. Neither application was denied. It was suggested that a variance be sought. Not understanding the technicalities, I gave Cisco Fencing to go-ahead to build the fence as originally scheduled. But the fence now violated the city's "key lot" ordinance (2015) and should be pulled back 20 feet from the front of the house (on Carlton Dr.), and 20 feet from the sidewalk rock wall (on Kettering Dr.). The actual denial of the Fence Permit occurred on June 4, 2026. There are several reasons for requesting a key lot code variance.

Hardship:
1. A stone-floored kiosk (12' x 14') approved by the city in 2015 would have to be entirely torn down and removed. Likely a 25' magnolia tree would also have to be removed. (Photos 12,14-15, 18-19)

2. The entire property has a significant slope (photos 12, 18-24). If key lot regulations were applied, the property would have to be significantly modified and terraced. Already the exterior white rock wall extends from 1 foot height at the front of the property to 5' 2" at the back corner of the lot (photos 20-24). Above the rock wall, the side fence on Kettering Drive and back fence is further sustained by 4 wood planks (2" x 6") and multiple (50) deepset steel posts in concrete to further strengthen the wall barrier (photo 29). Inside the fence, the grassed terrain drops off another 2 to 3 feet above the 5' rock wall and 2' wooden barrier. Terracing the property would require significant rebuilding of the landscape, bringing in new top soil, resodding Augustine grass, restructuring irrigation, and removing the (now) new fence and foundations.

3. If key lot regulations were required, the rebuilding of the fence would leave a largely useless lawn outside the fence; the front gate would either be eliminated or narrowed (photos 12, 16); a new fence, even if 6 foot rather than 8 foot, would block the view of the lake and neighbors. Beyond the sizeable cost of releveling the property and retracting the fence, the change would significantly devalue the property.

ATTACHMENTS:

1	Ltr. Request for Variance to Board of Adjustment, City of Garland
2	Application, Board of Adjustment 6.10’26
3	Notarized Applicatn, Board of Adjustment 6.10’26
3b	Notarized Applicatn, Owner’s Affidavit
4	Action, Bd of Adjustment
5	Ltr. Fence Permit Denied, City of Garland
6	Architect Map Fence Permit Denied doc. 6.5’26
7	Architect Map for Revision, Jill Stone
8	Original 2002 Plat, 4405 Carlton Dr.
9	Shores of Wellington subdivision
10	Front of house (2024), original fence and corner Carlton & Kettering
11	Front of house after fence replacement 2026
12-15	Backyard (new) fence
15b	Back fence to back gate
16	Front (right) gate & 20ft measurement
17	Kiosk & 20ft measurement
18	Backyard slope toward Kettering Dr.
19	Kiosk, back slope to 8ft embankment
20	External Kettering slope facing front (Carlton)
21-24	External Kettering Dr rock wall (5’2”) + wooden barrier (4 2 x 6), 24”
25-28	External back wall, front gates
29	Inside fence reinforcement, 50 deepset posts
30-33	Neighbors, and front house 4405 Carlton Dr

Dr. John Scott, Ruth HORRELL, 4405 Carlton Drive, Garland TX, 75043

Fence dimensions same when purchased in 2012. Rebuilt 2026. Note kiosk approved by the city in 2015. Designated a "key lot" by city ordinance in 2015.

Talk to neighbors beforehand. This matters more than people realize.

If nearby neighbors support it — or at least do not oppose it — approval odds improve substantially. A single angry adjacent neighbor can derail borderline requests.

NEIGHBORS: All approve fence.

k. 4324 Kettering Dr., Chris, Megan Farmer [redacted]

1. 4327 Kettering Dr., Chris, Angel Blamdon Approval

3. 4331 Kettering Dr., Dr. Charles, Margie Foster [redacted]

4. 4402 Carlton Dr., Nadia [redacted] (out of USA)

5. 4406 Carlton Dr., Brent, Abbie Voorhees [redacted]

Subject: DENIAL LETTER
Date: Thursday, June 4, 2026 at 4:54:11 PM Central Daylight Time
From: Mondragon, Edgar <EMondragon@garlandtx.gov>
To: Scott Horrell <shorrell@dts.edu>
CC: Fields, Donna <DFields@garlandtx.gov>, Colon, Rachel <RColon@garlandtx.gov>
Attachments: image001.png, REQUEST FOR VARIANCE 20 DAY LETTER.docx

CAUTION: This email originated from outside of the organization. Do not click links or open attachments unless you recognize the sender and know the content is safe.

Good morning, your permit application for the (F26-0206) is denied for the following reasons,

- KEY LOT RULES STATE, THE FENCE MUST MEASURE UP TO THE BUILDING LINE OF THE REAR PROPERTY IT BACKS UP TO

I am attaching your denial letter which states that you have the option to go in front of the B.O.A. to request a variance. You have until JULY 24TH, 2026 to apply for this variance or your rights to an appeal will be waived.

Edgar Mondragon
Permit Tech 3
ICC Certified Permit Technician
ICC Certified Zoning Inspector
City of Garland
Building Inspections Department

GARLAND
TEXAS MADE HERE

Office 972-205-2300
Office Email permits@garlandtx.gov
Online Permit https://my.garlandtx.gov/SignIn

Tomas Godula 02-04-4069

PLAT SHOWING

Lot 14, Block 8, of THE SHORES OF WELLINGTON, NO. 5, an addition to the City of Garland, Dallas County, Texas, according to the Map or Plat thereof recorded in Volume 2000140, Page 2590 of the Plat Records of Dallas County, Texas.

4405 CARLTON DRIVE

KEY LOT RULES STATE, THE FENCE MUST MEASURE UP TO THE BUILDING LINE OF THE REAR PROPERTY IT BACKS UP TO

SURVEY EXAMINED AND ACCEPTED BY PURCHASING
NAME
NAME
DATE
DATE

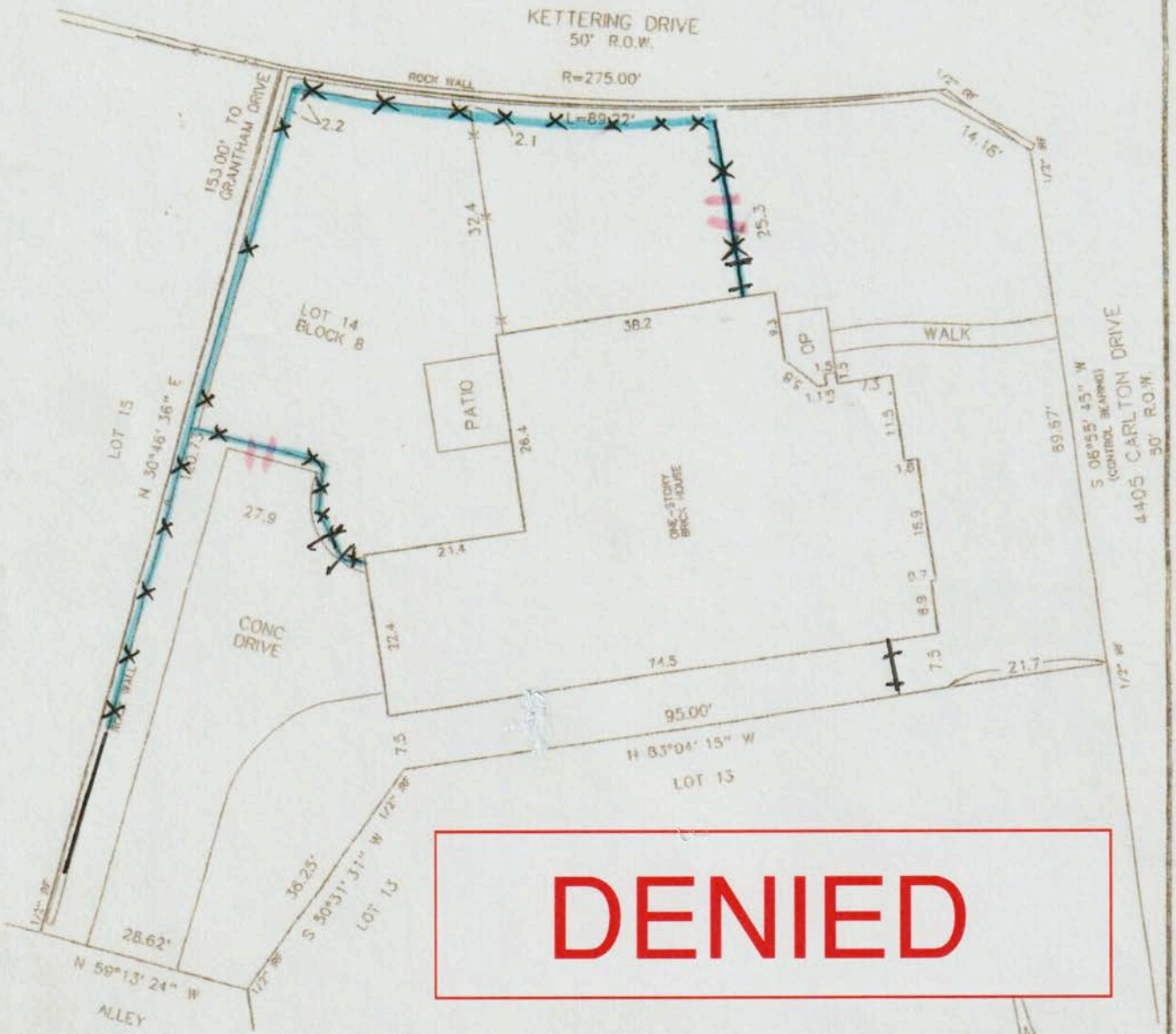

DENIED

"FLOOD CERTIFICATION"
Subject property is located in Zone X according to the Flood Insurance Rate Map Community-Panel Map # 48113C0380 J
Dated: August 23, 2001

"NOTE"
To the best of knowledge and belief the easements recorded in Volume 73081, Page 1798, Volume 86084, Page 548, Page 551, and Page 554 of the Deed Records of Dallas County, Texas do not affect the subject property

CAUTION: This email originated from outside of the organization. Do not click links or open attachments unless you recognize the sender and know the content is safe.

This lot is what we call a key lot and it borders two streets. Being a key lot the area I have highlighted below is considered a front yard meaning you cannot build in this area. Not all corner lots are key lots but it depends on how the development was set and the way the houses face.

Jill Stone
Permit Supervisor
Building Inspection
City of Garland
800 Main St
Garland, TX 75040

Tomas Godula 02-04-4069

PLAT SHOWING

Lot 14, Block 8, of THE SHORES OF WELLINGTON, NO. 5, an addition to the City of Garland, Dallas County, Texas, according to the Map or Plat thereof recorded in Volume 2000140, Page 2590 of the Plat Records of Dallas County, Texas.

4405 CARLTON DRIVE

Garland 75043

SURVEY EXAMINED AND ACCEPTED BY PURCHASER
NAME: John & Joy Lovell DATE 4-27-12
NAME: Kevin & Maureen Stone DATE 4-27-12

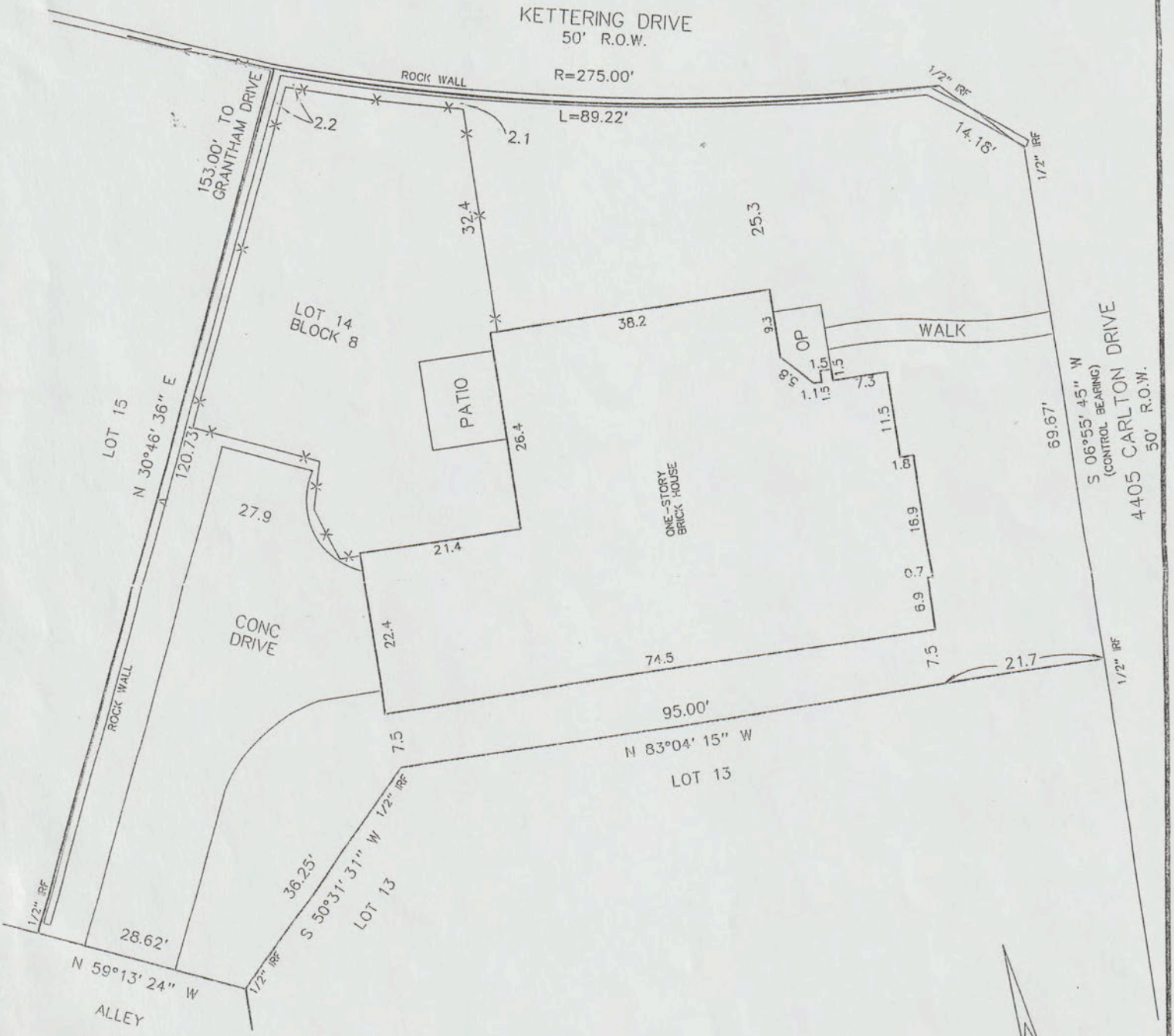

"FLOOD CERTIFICATION"
Subject property is located in Zone X according to the Flood Insurance Rate Map Community-Panel Map # 48113C0380 J
Dated: Agust 23, 2001

"NOTE"
To the best of knowledge and belief the easements recorded in Volume 73081, Page 1798, Volume 86084, Page 548, Page 551, and Page 554 of the Deed Records of Dallas County, Texas do not affect the subject property.

trulia Search for City, Neighborhood, Zip, County, School

4406

Above, 4405 Carlton Drive, front, c. 2024. Fence original to purchase in 2012

Below, Carlton Dr to Kettering Dr last homes in development on edge of Lake Ray Hubbard; note slope on hillside.

4405
ADT

HibiscQs

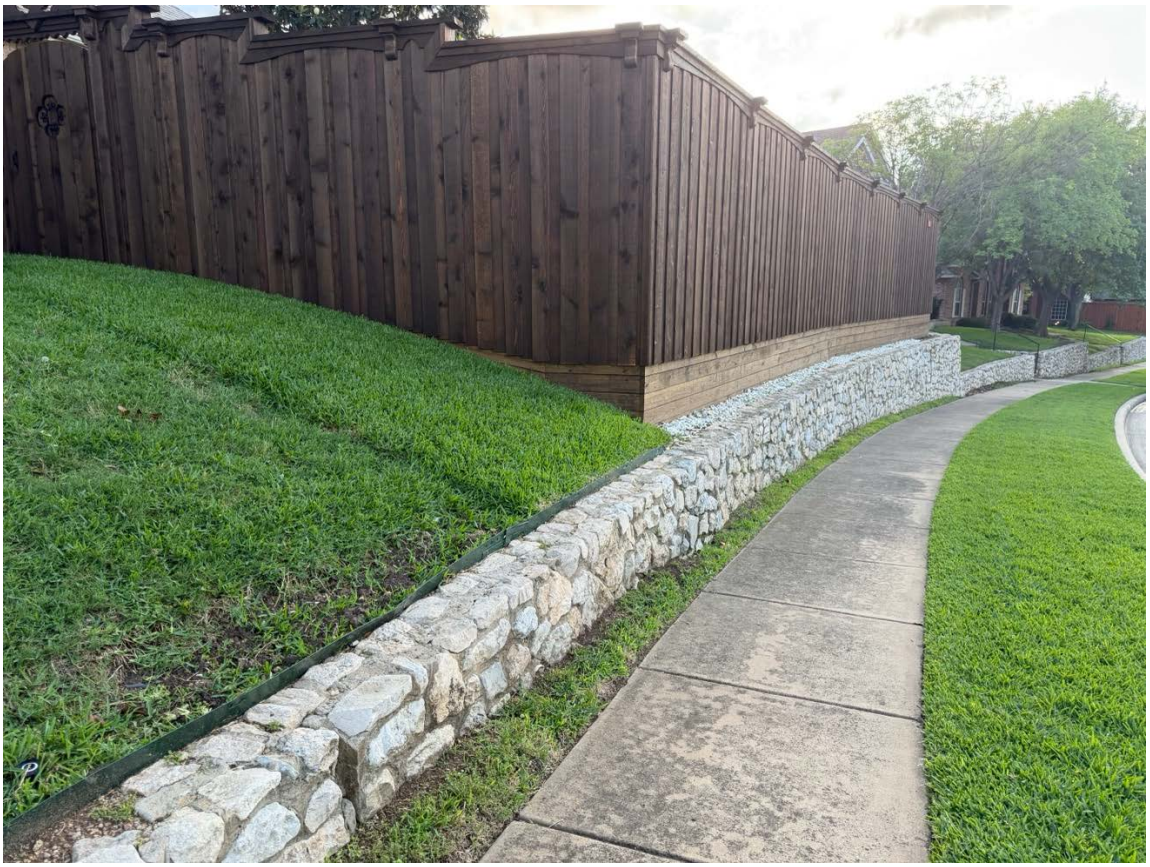

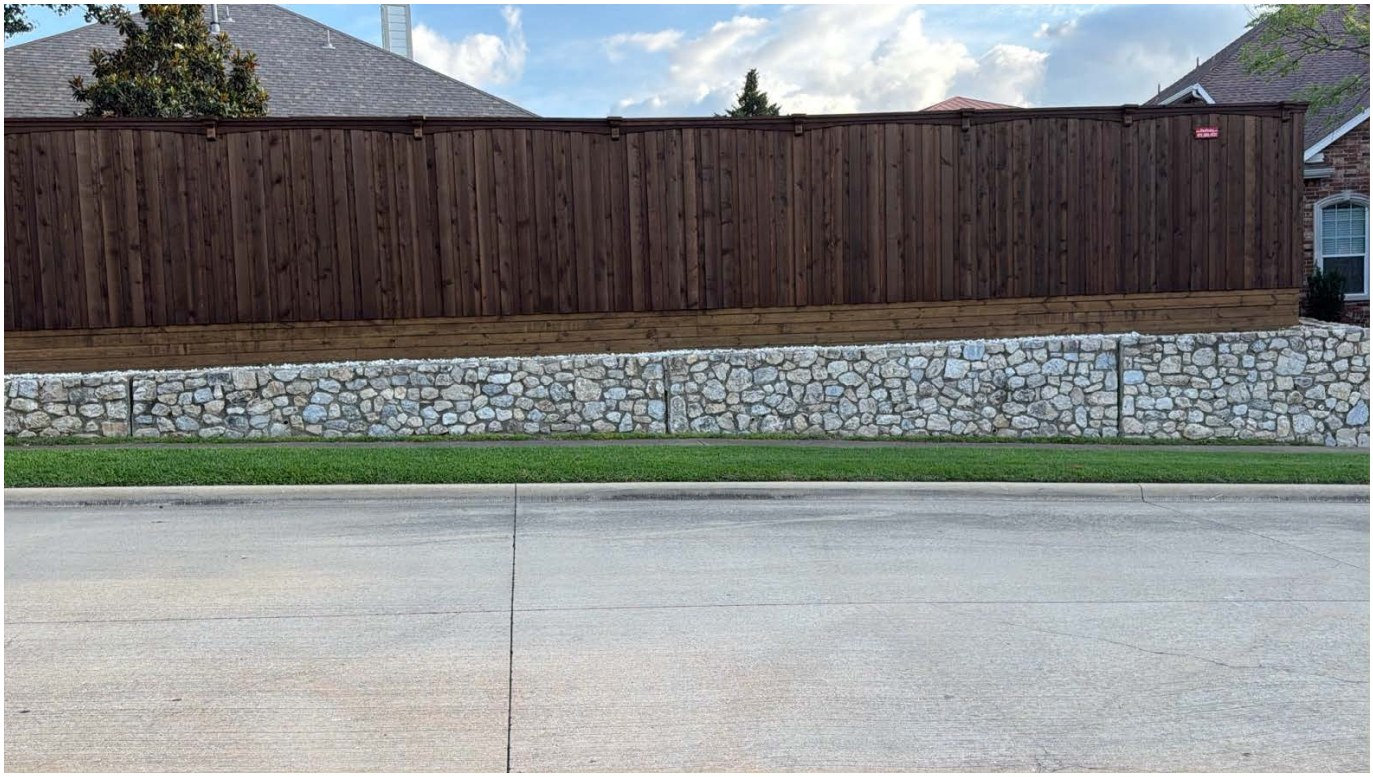

www.BestFencing.com
972.880.4591

HEAVY DUTY STAIN
214.298.2235
www.ChuckFencing.com
972.880.4531

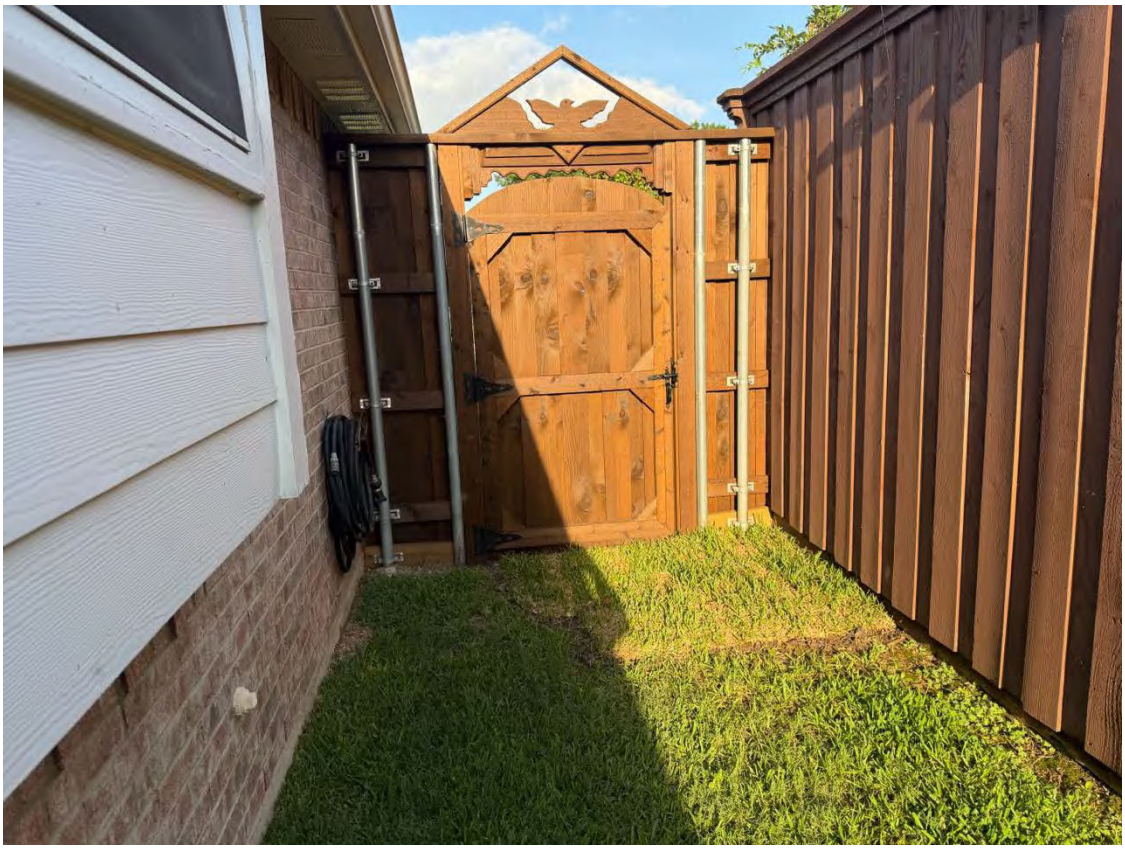

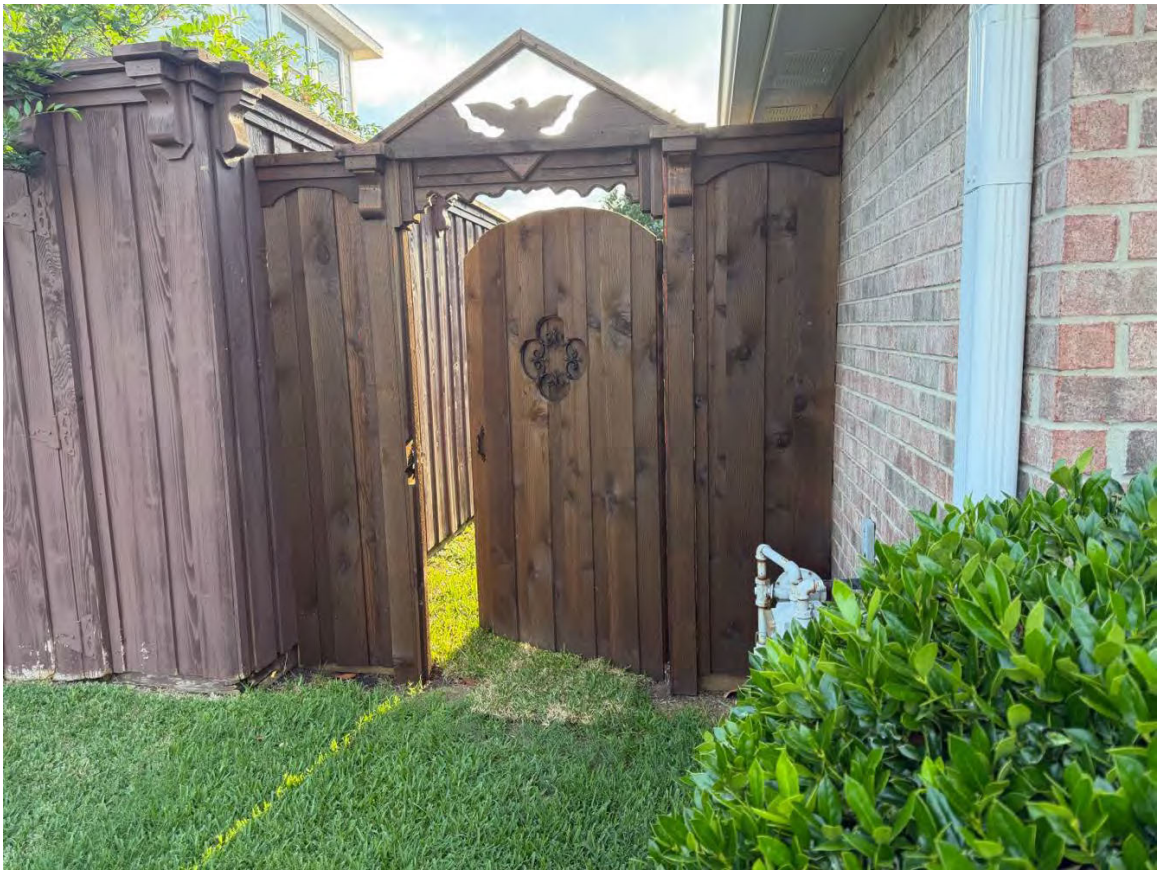

214.298.2233

4405